BAS16 Switching Diode

Features

- Fast Switching Speed
- For General Purpose Switching Applications
- High Conductance

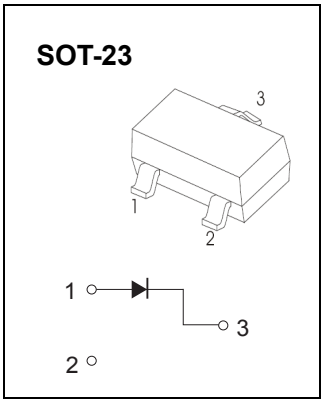

Marking Information

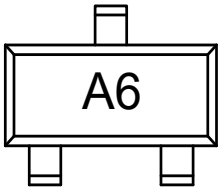

A6 = Device Marking Code

Absolute Maximum Ratings (T_A=25°C unless otherwise specified)

Parameter	Symbol	Limit	Unit
Non-Repetitive Peak Reverse Voltage	V_{RM}	100	V
Peak Repetitive Peak Reverse Voltage **Working Peak Reverse Voltage** **DC Blocking Voltage**	V_{RRM} V_{RWM} V_R	75	V
RMS Reverse Voltage	$V_{R(RMS)}$	53	V
Forward Continuous Current	I_{FM}	300	mA
Average Rectified Output Current	I_O	150	mA
Non-Repetitive Peak Forward Surge Current @t=8.3ms	I_{FSM}	2.0	A
Power Dissipation	Pd	225	mW
Thermal Resistance Junction to Ambient	$R_{\theta JA}$	556	℃/W
Junction Temperature	T_j	150	℃
Storage Temperature	T_{STG}	-55~+150	℃

Electrical Characteristics (T_A=25°C unless otherwise specified)

Parameter	Symbol	Test conditions	Min	Max	Unit
Reverse breakdown voltage	$V_{(BR)}$	I_R= 100μA	75		V
Reverse voltage leakage current	I_R	V_R=75V		1	μA
Forward voltage	V_F	I_F=1mA I_F=10mA I_F=50mA I_F=150mA		0.715 0.855 1 1.25	V
Diode capacitance	C_D	V_R=0, f=1MHz		2	pF
Reveres recovery time	t_{rr}	I_F=I_R=10mA,I_{rr}=0.1×I_R, R_L=100Ω		6	ns

Typical Performance Characteristics (TA=25℃ unless otherwise Specified)

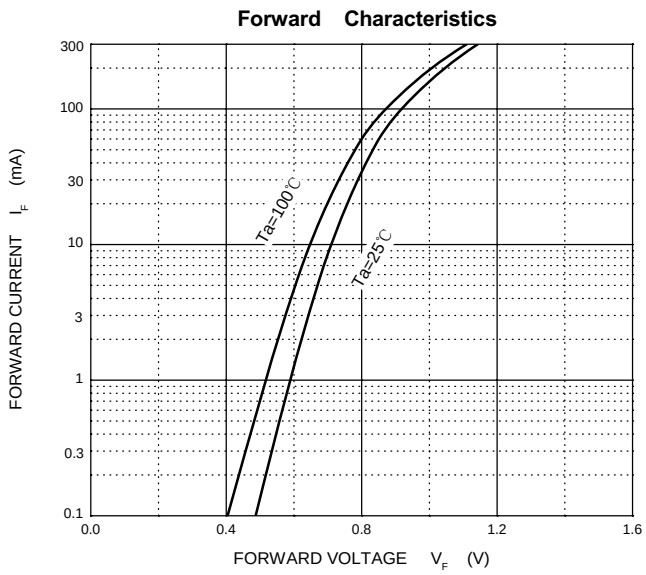

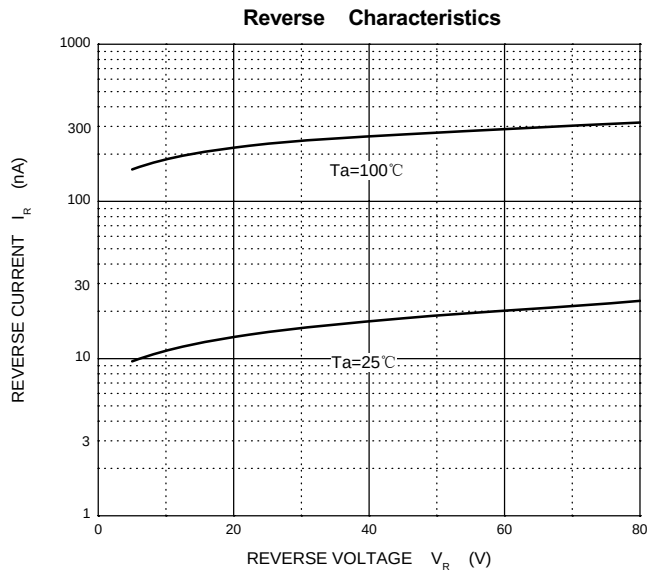

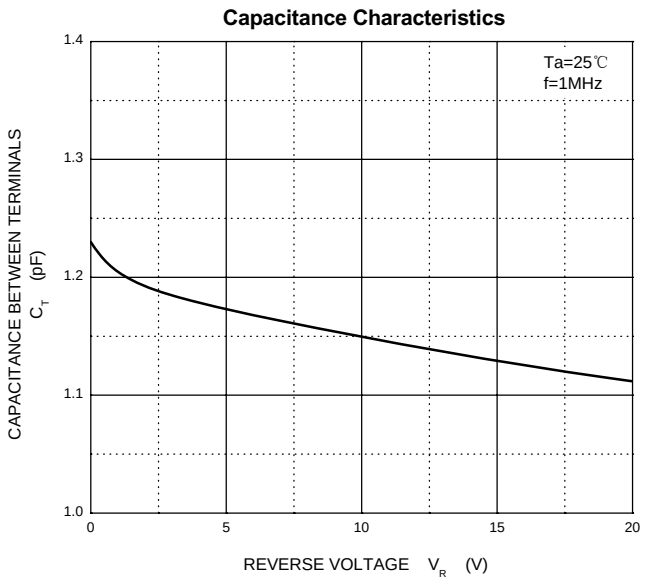

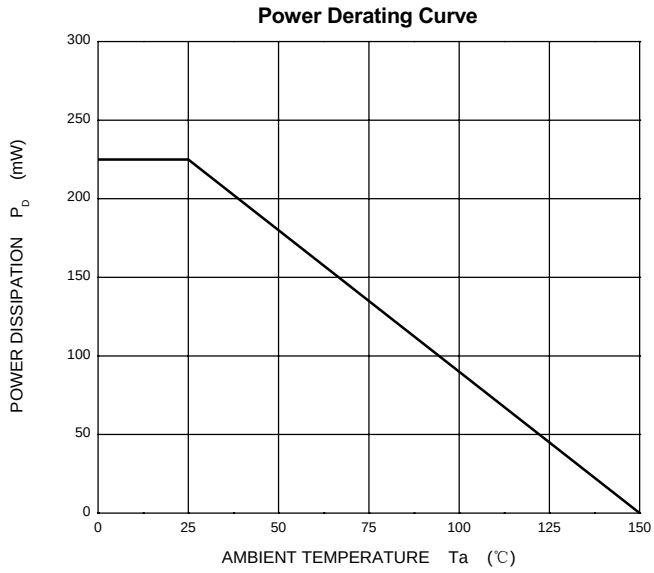

SOT-23 Package Outline Drawing

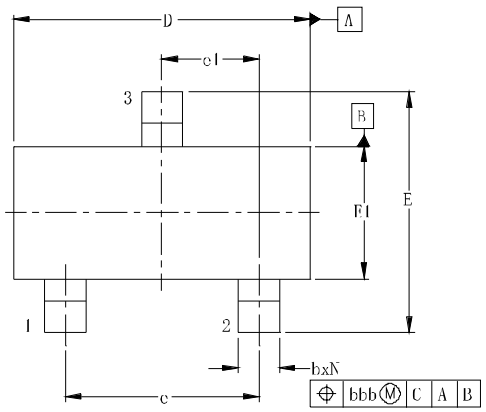

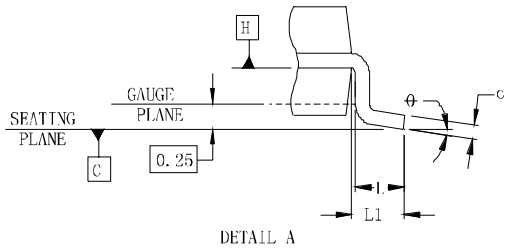

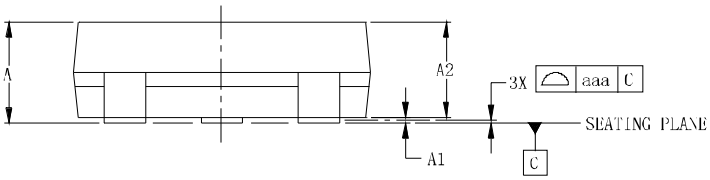

DIMENSIONS						
SYM	INCHES			MILLIMETERS		
	MIN	NOM	MAX	MIN	NOM	MAX
A	0.035	-	0.044	0.89	-	1.12
A1	0.000	-	0.004	0.01	-	0.10
A2	0.035	0.037	0.040	0.88	0.95	1.02
b	0.012	-	0.020	0.30	-	0.51
c	0.003	-	0.007	0.08	-	0.18
D	0.110	0.114	0.120	2.80	2.90	3.04
E	0.082	0.093	0.104	2.10	2.37	2.64
E1	0.047	0.051	0.055	1.20	1.30	1.40
e	0.075			1.90BSC		
e1	0.037			0.95BSC		
L	0.015	0.020	0.024	0.40	0.50	0.60
L1	0.022			0.55		
N	3			3		
θ	0°	-	8°	0°	-	8°
aaa	0.004			0.10		
bbb	0.008			0.20		

Suggested Land Pattern

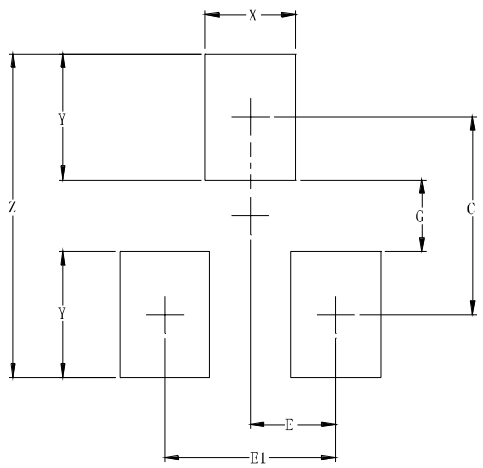

DIMENSIONS		
SYM	INCHES	MILLIMETERS
C	0.087	2.20
E	0.037	0.95
E1	0.075	1.90
G	0.031	0.80
X	0.039	1.00
Y	0.055	1.40
Z	0.141	3.60

Contact Information

Changzhou D-first Electronics CO.,Ltd.
www.first-electronic.com
Email: xhf@first-electronic.cn
Phone: +86（0519）-8817 1671